Optimized Sinus Wave generation with Compressed Sensing for Radar Applications

Alexander Ens et al.

October 1, 2013

Table of Contents

Table of Contents

Ultrasonic Radar

- Slow wave propagation $v_0 \approx 330$ m/s
- Low frequency system in 40 kHz range $\rightarrow$ No downmixing
- High precision with simple hardware
- Short range Radar

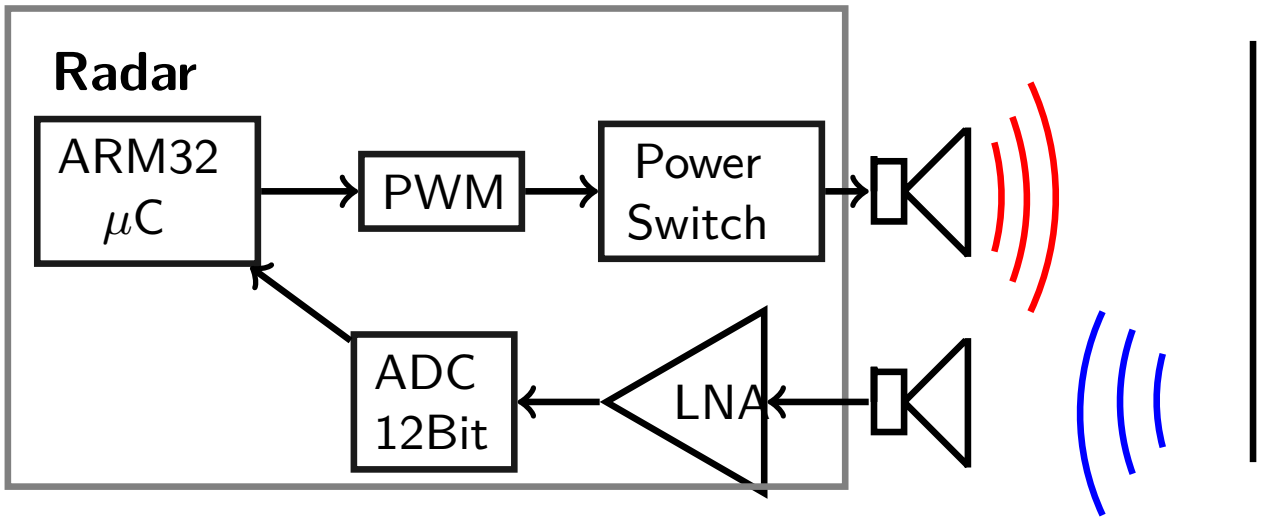

Figure: Blockdiagramm of ultrasonic Radar

Motivation

- Reduce the error of sinus generation

$$\epsilon = \|\boldsymbol{y} - \boldsymbol{A}\boldsymbol{x}\|_{\ell_2}$$

- Better SNR at the receiver without channel estimation
- Simple signal processing at the receiver
- Reduce the compuation time

Table of Contents

Mathematical Formulation I

Measured characteristic of ultrasonic devices $\rightarrow$ channel information

$f_{\mathrm{ADC}} < f_{\mathrm{PWM}}$

$y \in \mathbb{R}^M$ $\quad$ $\Phi \in \mathbb{R}^{M \times N}$ $\quad$ $\Psi \in \mathbb{R}^{N \times N}$ $\quad$ $x \in \mathbb{B}^N$

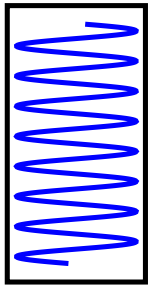

$$= \begin{bmatrix} 1 & 0 & \cdots & \cdots & 0 \\ \cdots & 0 & 1 & 0 & \vdots \\ \vdots & \ddots & 1 & 0 & \vdots \\ 0 & \cdots & 0 & 1 & 0 \end{bmatrix} \begin{bmatrix} \sim & 0 & \cdots & \cdots & \cdots & 0 \\ \cdots & \sim & 0 & \cdots & \cdots & 0 \\ \cdots & \sim & \sim & 0 & \cdots & 0 \\ \vdots & \sim & \sim & \sim & & \vdots \\ 0 & \cdots & \sim & \sim & \sim & 0 \\ 0 & \cdots & 0 & \sim & \cdots & \sim \\ 0 & \cdots & \cdots & 0 & \sim & \cdots \\ 0 & \cdots & \cdots & \cdots & 0 & \sim \end{bmatrix} \begin{bmatrix} 0 \\ \vdots \\ 1 \\ \vdots \\ 0 \\ \vdots \\ 1 \end{bmatrix}$$

Figure: Scheme of PWM generation

Mathematical Formulation II

- Problem Formulation

$$\arg\min_{\boldsymbol{x}} \|\boldsymbol{y} - \boldsymbol{A}\boldsymbol{x}\|_{\ell_2} \qquad \text{s.t. } x_n \in \{0,\, 1\}$$

- with the channel matrix

$$\boldsymbol{A} = \boldsymbol{\Phi}\boldsymbol{\Psi}, \qquad \boldsymbol{A} \in \mathbb{R}^{M \times N}$$

- and the transformed reference sinus signal

$$\boldsymbol{y} = 2\boldsymbol{y}_{\text{Ref}} - \boldsymbol{1}_M$$

- The problem formulation is then:

$$\arg\min_{\boldsymbol{x}} \|\boldsymbol{x}\|_{\ell_1} \qquad \text{s.t. } \|\boldsymbol{y} - \boldsymbol{A}\boldsymbol{x}\|_{\ell_2} \leq \epsilon,\; x_n \in [0,\, 1]$$

Mathematical Formulation II

- Problem Formulation

$$\arg\min_{\boldsymbol{x}} \|\boldsymbol{y} - \boldsymbol{A}\boldsymbol{x}\|_{\ell_2} \qquad \text{s.t. } x_n \in \{0,\, 1\}$$

- with the channel matrix

$$\boldsymbol{A} = \boldsymbol{\Phi}\boldsymbol{\Psi}, \qquad \boldsymbol{A} \in \mathbb{R}^{M \times N}$$

- and the transformed reference sinus signal

$$\boldsymbol{y} = 2\boldsymbol{y}_{\text{Ref}} - \boldsymbol{1}_M$$

- The problem formulation is then:

$$\arg\min_{\boldsymbol{x}} \|\boldsymbol{x}\|_{\ell_1} \qquad \text{s.t. } \|\boldsymbol{y} - \boldsymbol{A}\boldsymbol{x}\|_{\ell_2} \leq \epsilon,\; x_n \in [0,\, 1]$$

Table of Contents

Compressed Sensing algorithms for PWM generation

Analysed Algorithms for PWM generation:

- Constraint Optimization BY Linearization Algorithm COBYLA [1]
- Binary Matching Pursuit (BMP), further development of the MP [2]

Binary Compressed Sensing

- Iterative algorithm for binary underdetermined optimization
- Solves following optimization problem:

$$\arg\min_{\boldsymbol{x}} \|\boldsymbol{y} - \boldsymbol{A}\boldsymbol{x}\|_{\ell_2} \qquad \text{s.t. } \|\boldsymbol{x}\|_{\ell_0} = K,\ x_n \in \{0,\ 1\}$$

- Complexity: $\mathcal{O}\left(MN^2\right)$

Binary Matching Pursuit

Require: sensing matrix $\boldsymbol{A}$, measerement vector $\boldsymbol{y}$, coefficients count K

$\hat{\boldsymbol{x}} \leftarrow \boldsymbol{0}$, $\boldsymbol{r}_0 \leftarrow \boldsymbol{y}$, $\Lambda_0 \leftarrow \emptyset$

for $i \leftarrow 1$; $i \leftarrow i + 1$ until $i > K$ **do**

  $\boldsymbol{g} \leftarrow \boldsymbol{A}^T \boldsymbol{r}_{i-1}$ ▷ Estimate signal from the residue

  $\boldsymbol{g}_{\Lambda_{i-1}} \leftarrow -\infty$ ▷ Disable the estimated indices

  $\lambda \leftarrow \operatorname{supp}\left(H_1\left(\boldsymbol{g}\right)\right)$ ▷ Find index of greatest value

  $\Lambda_i \leftarrow \Lambda_{i-1} \cup \lambda$ ▷ Add the new index to the set

  $\hat{\boldsymbol{x}}_i|_{\Lambda_i} \leftarrow 1$ ▷ Set the values to one

  $\hat{\boldsymbol{x}}_i|_{\Lambda_i^c} \leftarrow 0$ ▷ All other values to zero

  $\boldsymbol{r}_i \leftarrow \boldsymbol{y} - \boldsymbol{A}\hat{\boldsymbol{x}}_i$ ▷ Calculate the residue

end for

Ensure: Coefficient vector $\hat{\boldsymbol{x}}$

Table of Contents

Different time length

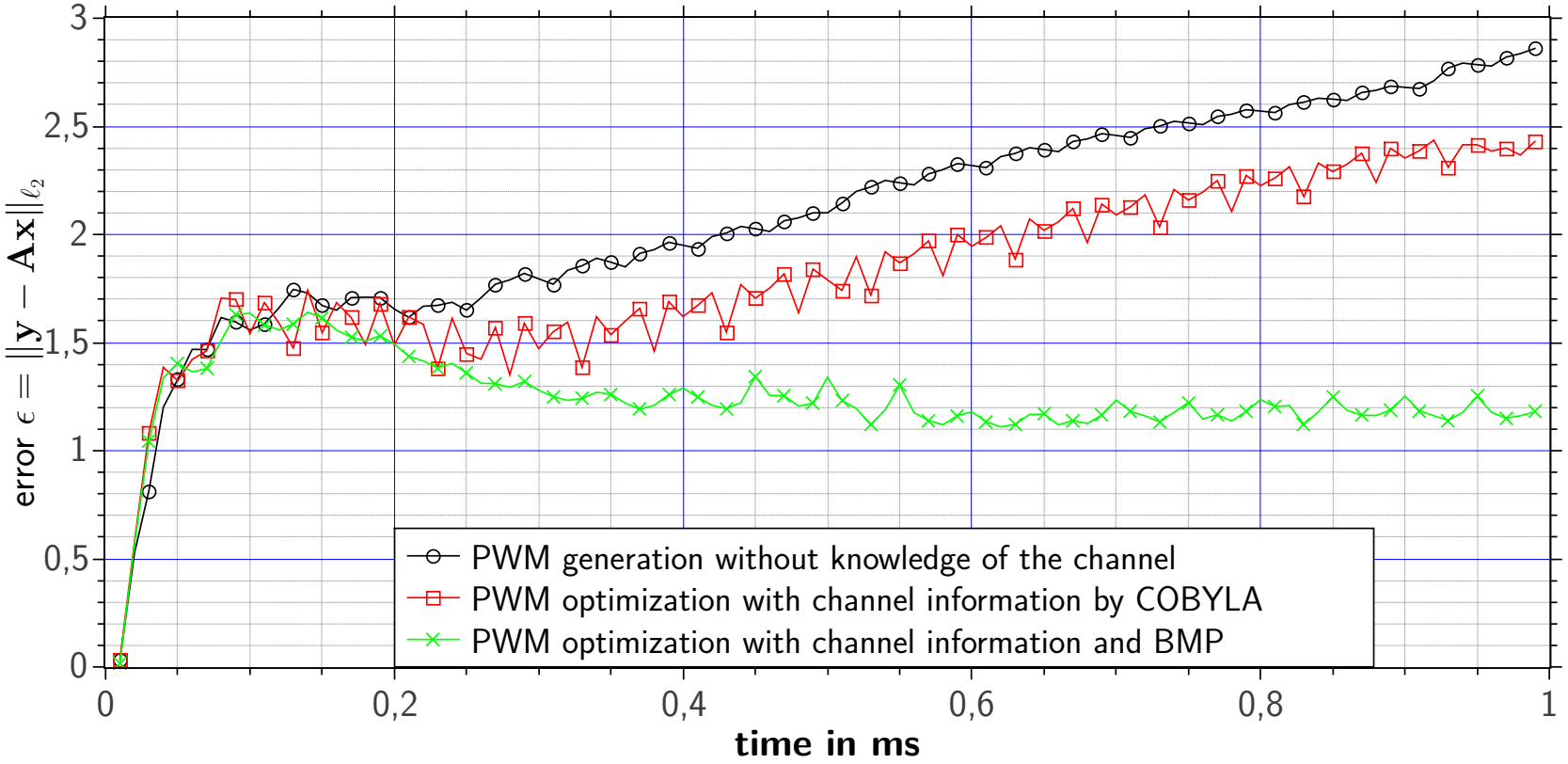

Figure: Error ϵ for different time length of the PWM pulse for $N/M = 2$

Different compression factors

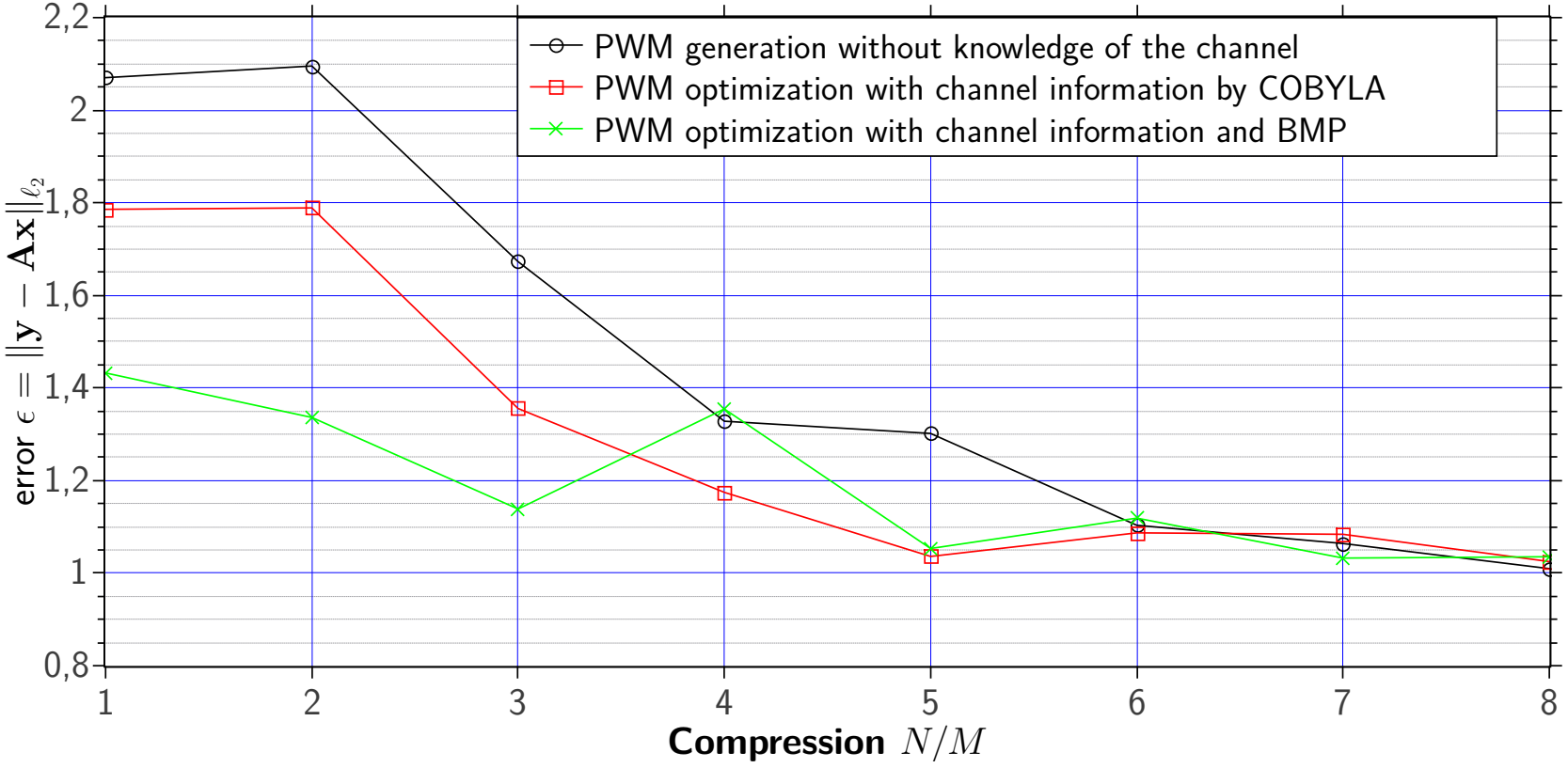

Figure: Error ϵ for different compression factors with ADC sampling frequency 100 kHz

PWM steps

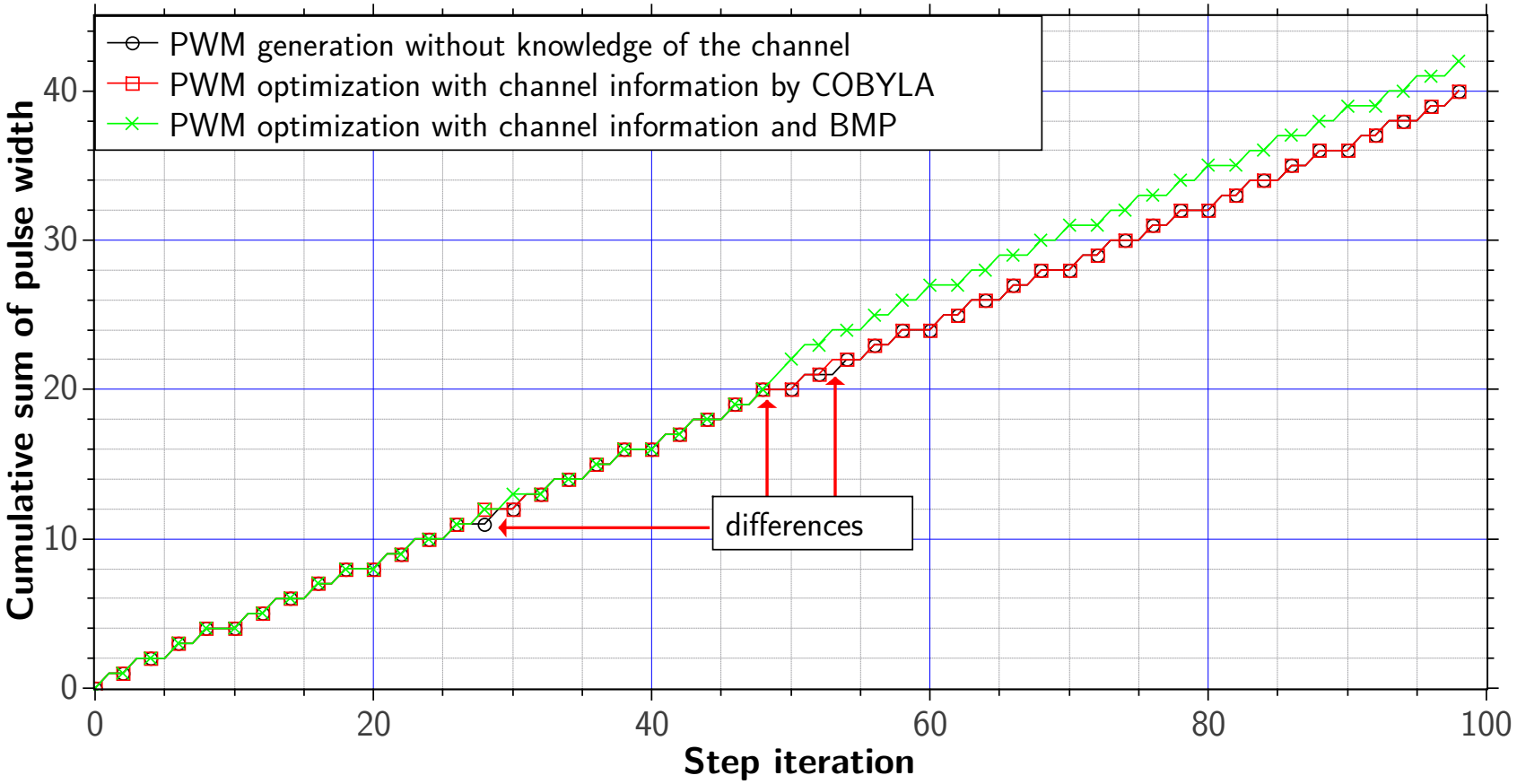

Figure: PWM generated signals with different methods

Optimized sinus signals

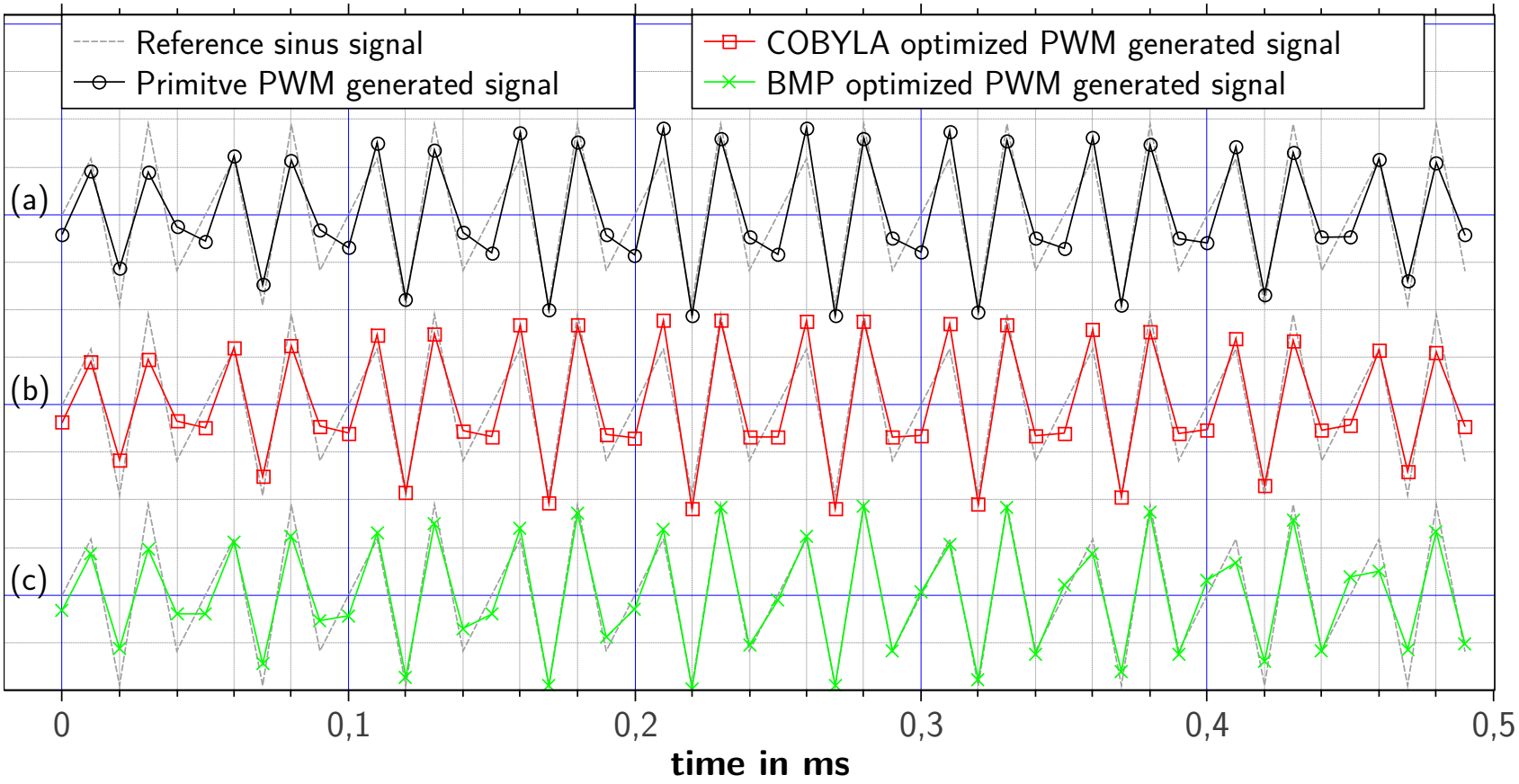

Figure: Sinus signal generated by PWM and multiplied with the channel for different methods.

Table of Contents

Summary

- Economicaly sinus generation by PWM
- Both optimizations decreases the error ϵ
- BMP complexity is $\mathcal{O}\left(MN^2\right)$
- BMP algorithm performs best

Closing

Thank you for your Attention!

References

- M. J. D. Powell, "Direct search algorithms for optimization calculations," *Acta Numerica*, vol. 7, pp. 287–336, 1998.
- S. Mallat and Z. Zhang, "Matching pursuits with time-frequency dictionaries," *IEEE Transactions on Signal Processing*, vol. 41, no. 12, pp. 3397–3415, 1993.